Dimensions 外觀尺寸

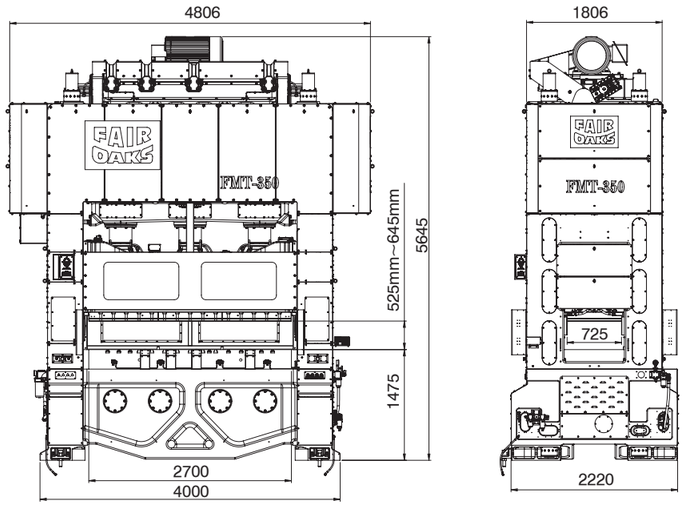

Specifications 主要規格

Item 項目		Unit 單位	FMT-350	FMT-450
Slide Support point	曲軸連桿結構		3 導柱	4 導柱
Nominal press capacity	公稱作用力	KN	3500	4500
Stroke	沖壓行程	mm	30	35
Capacity occur point	能力發生點	mm	2.0	2.0
Stroke per minute	沖程數 (無負載)	S.P.M	100~400	100~300
Die height upper limit specified range"	閉模高度上限指定範圍	mm	525~645	525~645
Slide height adjustment	滑塊調整量	mm	75	75
Slide area	滑座面積	mm	2700 x 800 (Min.) 2700 x 1000 (Max.)	3700 x 1000 (Min.) 3700 x 1200 (Max.)
Bolster area	工作台面積	mm	2700 x 1000	3700 x 1200
Bolster thickness	工作台厚度	mm	260	260
Bolster hole	工作台落料孔尺寸	mm	2500 x 350 (Max: 500)	3200 x 500 (Max.)
Base bed hole	床台落料孔尺寸	mm	2500 x 420	3200 x 520 3500 x 520 (Max.)
Max Upper DIE weight	允許上模重量	kg	2300	4000
Main Motor	主馬達功率	kw	75	75
Air supplier	使用氣壓	mpa	0.5	0.5
Quick lift Slide device	快速上昇行程	mm	75	75
Weight of machine	設備總重	Tons	78	100
Accuracy	沖床精度		JIS Special 特級精度	

- Our catalog mentioned SPM is Presses running without loading Die speed.
- Our catalog mentioned Die height upper limit specified range, Bolster thickness, Bolster hole, it can be revise according to customer requirement.
- 本型錄標示之沖程數為無搭配模具，空機無負載狀態下之運轉速度。
- 閉模高度上限指定範圍、工作台厚度、下料孔，皆可依照客戶實際要求作變更。
- Specifications, dimensions, and design characteristics are subject to change without previous notice.
- 本公司不斷研究改良，目錄上所示之尺寸及機器特性可能會有所變更，恕不另行通知。

OPTIONAL EQUIPMENT

- Die height detector.
- Loading Monitor.
- Hydraulic die clamping device.
- Material lubricating device-Spray type.
- Hi-speed gear change type feeder.
- Leveler & "S" loop control.
- Double head un-coiler.
- Servo S leveler "S" loop and active type uncoiler.

選購配備

- 下死點精度檢測器
- 壓力負荷計
- 快速油壓夾模裝置
- 噴霧式材料潤滑系統
- 高速齒輪式送料機.
- 整平出料機.
- 雙頭油壓開捲機.
- 伺服整平機及主動式料架系統

FAIR OAKS PRECISION MACHINERY(F) CO., LTD
高 將 精 機 廠 股 份 有 限 公 司
台灣 42953 台中市神岡區溪頭路 171 號
No.171, Xitou Rd., Shengang Dist., Taichung City 42953, Taiwan.
TEL: +886-4-2563 2320 FAX: +886-4-2563 3133
E-mail: goal.jump@msa.hinet.net http://www.fairoaks-press.com.tw

02.2024 / 2000 03-068 /S Sunway 04-2322 7907

Multi Suspension Type High Speed Press

多點式支撐高速精密沖床

Featuring High speed....
Precision, Safety, and Durability....

FAIR OAKS PRECISION MACHINERY(F) CO., LTD
高 將 精 機 廠 股 份 有 限 公 司

FMT Series

Multi Suspension Type High Speed Press

多點式支撐高速精密沖床

高將FMT系列是為了提供需要較大床台面積的超高精度模具，生產高附加價值的電動機而開發出來的多點式支撐高度精密沖床。FMT系列採用多點式支撐搭配八面導軌滾針軸承組在高速負載下，滑塊保持高精度、鋼性高的特性，又具有寬闊床台的特色，因此運用於生產EV或HEV電機與節能家電，可提供長期穩定高品質的表現。

FAIR OAKS high-pressure FMT series is a multi-point support high-precision punching machine developed to provide ultra-high-precision molds requiring a large bolster area and producing high value-added motors. The FMT series adopts multi-point support and Octahedron level needle roller bearing set. Under high-speed load, the slide maintains high precision and high rigidity, and has the characteristics of a wide bolster. Therefore, it is used in the production of EV or HEV motors and energy saving home appliances can provide long-term stable and high-quality performance.

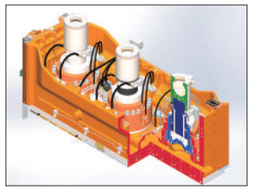

滑座快速上昇裝置
Quick lift slide device

多點式支撐
Multi-Point Support

滑塊八面導軌
Octahedron level needle roller bearing set

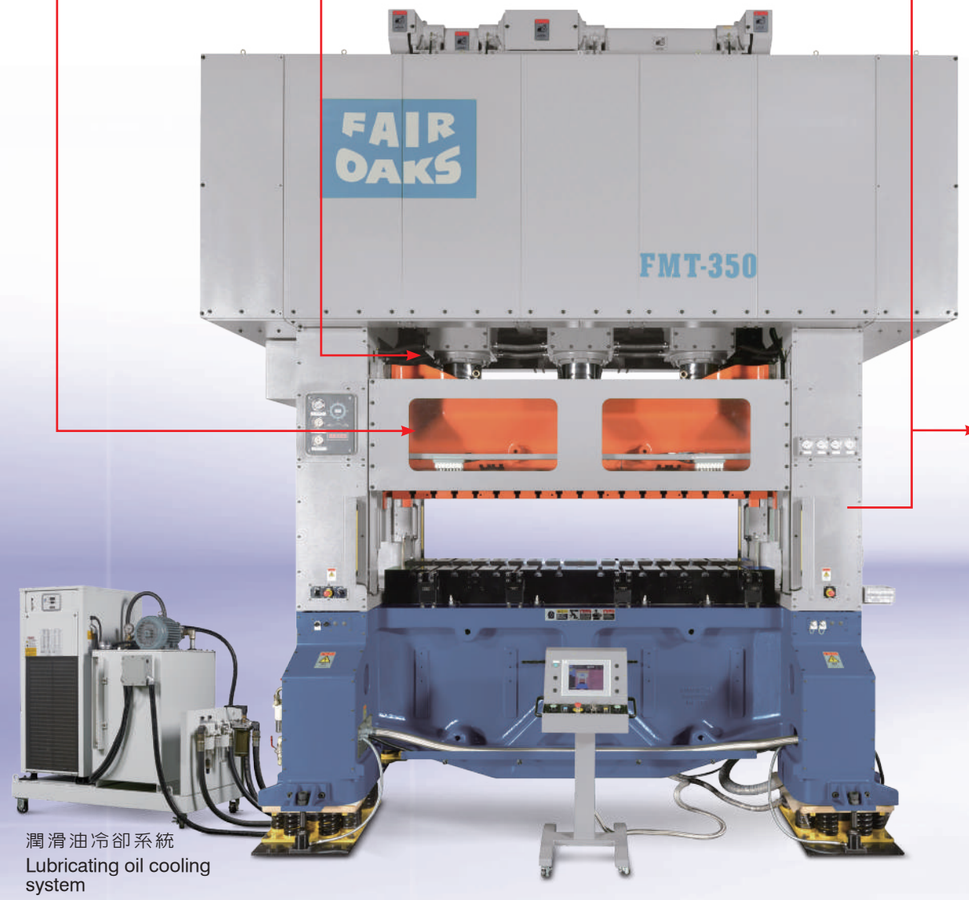

中座及滑塊減震裝置
Upright seat and Slide shock absorber

潤滑油冷卻系統
Lubricating oil cooling system

人機介面 F-3SC-S 沖壓控制器

高將人機介面 F-3SC-S 沖壓控制器，將傳統沖床機身上之動作控制相關按鍵，全部併入於人機介面觸控式沖壓控制器，該具備馬達轉定子斜槽控制功能、馬達轉子中心孔階段控制、轉子及定子的疊層厚度控制，而當故障發生時，導入對話式異常碼故障排除訊息，提供使用者簡單方便且容易上手的操作介面，以達到更有效率之生產需求。

模內鉚合 (油壓頂缸系統)★選購設備★

模內鉚合-油壓頂缸系統有效改善傳統沖壓過程中因鐵芯模具中採用縮緊圈的因素，以致轉定子疊實會有過鬆或過緊，產生鬆弛或變形、外型拉傷，產生鉚點鉚壓不均、鐵芯片變形，造成疊厚不均，動平衡不佳之缺點；該設備主要由頂缸、高速沖模具的配套設備，和 F-3SC-S 沖壓控制系統構成。該系統是從沖壓、斜槽控制、計量到積層疊鉚和壓緊，進行全自動生產的產品，通過這種方法，定轉子只需沖型和壓入，不需依靠模具縮緊圈的作用，達到積層、 疊鉚與壓緊之轉定子成品垂直度及同心度之要求，不需再經由傳統鉚壓機工序，達到更有效率的生產效能，使產品質量得到很大的提升。

User-Friendly type Stamping controller

FAIR OAKS User-friendly type F-3SC-S stamping controller integrates the action control related buttons on the traditional press machine body into the User-friendly touch screen-type stamping controller, which has the motor-to-rotor stator skew control function and the motor rotor center Shaft Hole size stage control, rotor and stator stack thickness control, and when the alarm occurs, the dialog exception code troubleshooting message is introduced to provide a user's simple and convenient and easy to use interface to achieve more efficient production requirements.

Automatic compress ★Optional equipment★ (Hydraulic pressure top cylinder)

The automatic compress hydraulic pressure top cylinder system effectively improves the factors used in the traditional stamping process due to the use of shrinkage rings in the die, so that the stator stack will be too loose or too tight, resulting in slack or deformation, external strain The rivet point is unevenly riveted and the rotor and stator is deformed, resulting in uneven stacking thickness and poor dynamic balance. The equipment is mainly composed of a top cylinder, die equipment, and F-3SC-S stamping control system. The system is a fully automatic production from stamping, skew control, metering to stacking interlocked and compaction. With this method, the stator and rotor only need to be punched and pressed, without relying on the function of the die shrink ring. To meet the requirements of verticality and concentricity of laminated stators, such as lamination, it is not necessary to use the traditional riveting process to achieve more efficient production efficiency, which greatly improves the product quality.

模內鉚合控制器系統流程圖
Auto. Compress System Flow Diagram

沖床 High speed press

F-3SC-S 人機介面沖壓控制器（可多排）
F-3SC-S User friendly type controller (Plural-Row available)
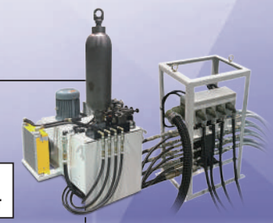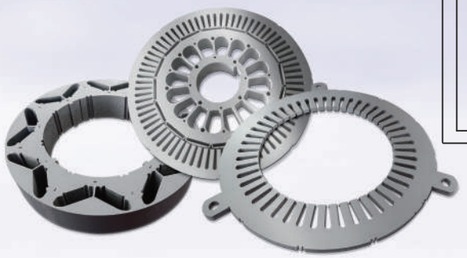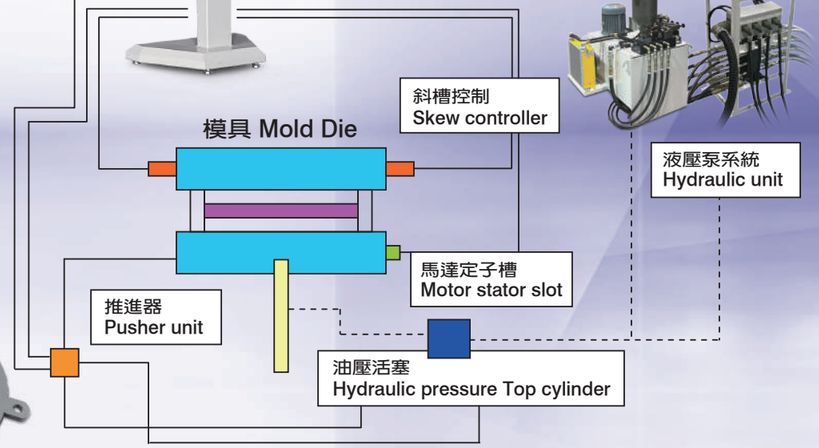
可內含 Built - in